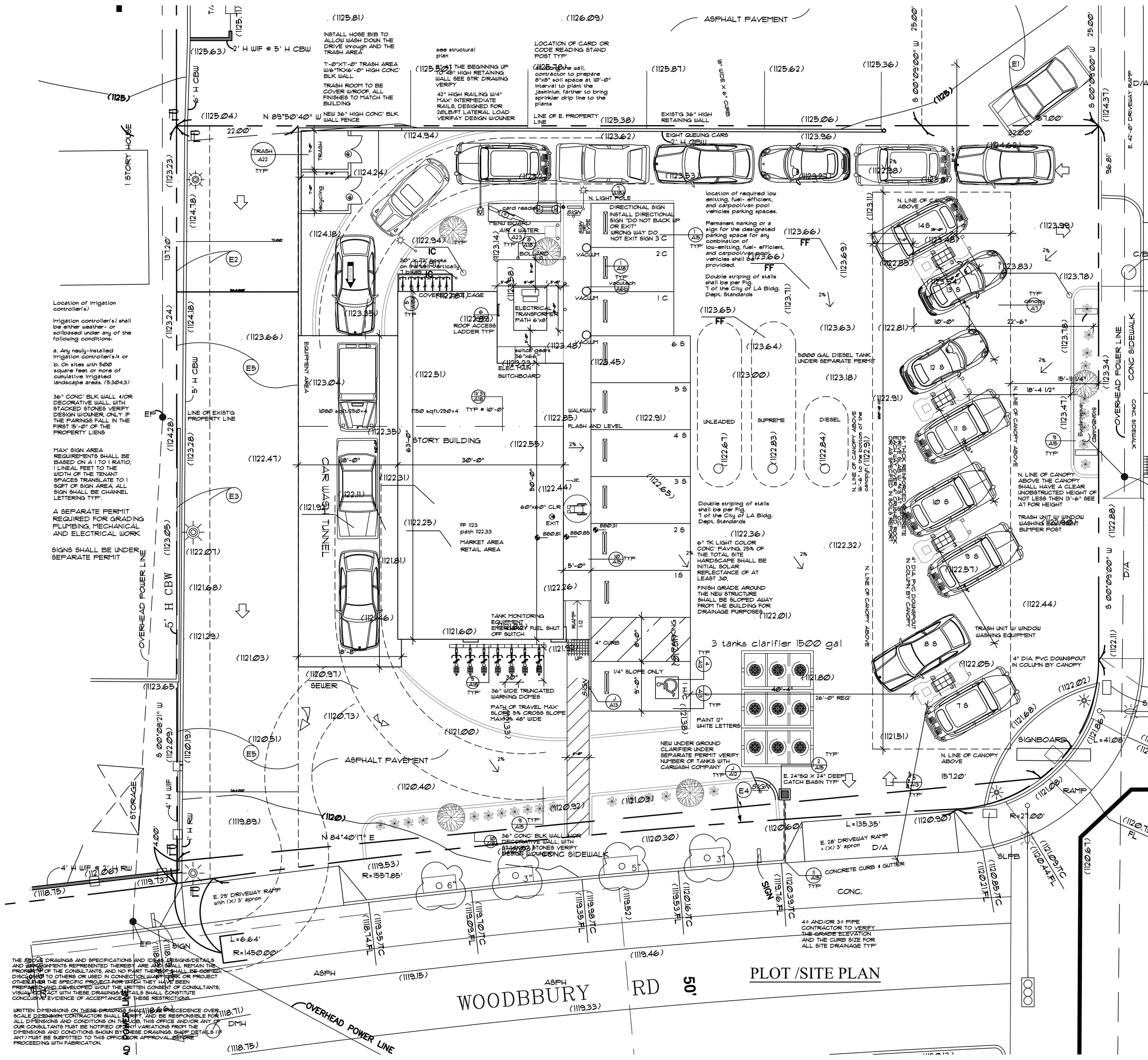

Location of irrigation controller(s)

Irrigation controller(s) shall be either weather- or soilbased under any of the following conditions:

a. Any newly-installed irrigation controller(s)1 or

b. On sites with 500 square feet or more of cumulative irrigated landscape areas. (5.304.3)

36" CONC' BLK WALL W/OR DECORATIVE WALL, WITH STACKED STONES VERIFY DESIGN W/OWNER ONLY' THE PARINGS FALL IN THE FIRST 15'-0" OF THE PROPERTY LIENS

MAX' SIGN AREA REQUIREMENTS SHALL BE BASED ON A 1 TO 1 RATIO, 1 LINEAL FEET TO THE WIDTH OF THE TENANT SPACES TRANSLATE TO 1 SQFT OF SIGN AREA, ALL SIGN SHALL BE CHANNEL LETTERING TYP'.

A SEPARATE PERMIT REQUIRED FOR GRADING PLUMBING, MECHANICAL AND ELECTRICAL WORK

SIGNS SHALL BE UNDER SEPARATE PERMIT

THE ABOVE DRAWINGS AND SPECIFICATIONS AND IDEAS, DESIGNS/DETAILS AND ARRANGEMENTS REPRESENTED THEREBY ARE AND SHALL REMAIN THE PROPERTY OF THE CONSULTANTS, AND NO PART THEREOF SHALL BE COPIED, DISCLOSED TO OTHERS OR USED IN CONNECTION W/ANY WORK OR PROJECT OTHER THAN THE SPECIFIC PROJECT FOR WHICH THEY HAVE BEEN PREPARED AND DEVELOPED W/OUT THE WRITTEN CONSENT OF CONSULTANTS, VISUAL CONTACT WITH THESE DRAWINGS/DETAILS SHALL CONSTITUTE CONCLUSIVE EVIDENCE OF ACCEPTANCE OF THESE RESTRICTIONS.

WRITTEN DIMENSIONS ON THESE DRAWINGS SHALL TAKE PRECEDENCE OVER SCALE DIMENSION. CONTRACTOR SHALL VERIFY AND BE RESPONSIBLE FOR ALL DIMENSIONS AND CONDITIONS ON THE JOB. THIS OFFICE AND/OR ANY OF OUR CONSULTANTS MUST BE NOTIFIED OF ANY VARIATIONS FROM THE DIMENSIONS AND CONDITIONS SHOWN BY THESE DRAWINGS. SHOP DETAILS (IF ANY) MUST BE SUBMITTED TO THIS OFFICE FOR APPROVAL BEFORE PROCEEDING WITH FABRICATION.

PLOT /SITE PLAN

1. DOWNSPOUTS ARE DESIGNED TO BE TIGHTLINED TO THE SITE'S UNDERGROUND STORM DRAINAGE SYSTEM. IF UNDERGROUND STORM SYSTEM IS NOT REQUIRED, DOWNSPOUTS SHALL BE ROUTED TO DAYLIGHT BEYOND DRIVE SLAB AREA. SHALL BE DESIGNED TO COMPENSATE TO PERMIT DAYLIGHTING OF PIPE IN SAFE LOCATION AS PERMITTED BY THE LOCAL JURISDICTION.
2. DRIVE SLAB SHALL HAVE A MEDIUM BROOM FINISH PERPENDICULAR TO ISLAND LAYOUT W/EXPANSION AND CONTROL JOINTS AS SHOWN.
3. CANOPY CONTRACTOR SHALL PROVIDE DOWNSPOUTS AND CONDUITS FOR LIGHTING AND P.I.C UNITS IN COLUMNS WHERE SPECIFIED. COORDINATE WITH GENERAL CONTRACTOR FOR EXACT LOCATION OF CONDUITS, AND HAND HOLES PRIOR TO FABRICATION.
4. ISLAND HEIGHTS SHALL BE THE SAME IN EACH ROW.
5. ISLAND FORMS SHALL BE PAINTED BLACK
6. PAD CERTIFICATION SHALL BE REQUIRED AT TIME OF FOOTING INSPECTION.

LIGHT FIXTURES ARE RECESSED MOUNTED, 320 WATT SUPER METAL HALIDE, LSI MODEL EC-S-320-LG-MT-UHT-TH, SUPPLIED BY OTHERS, UNLESS ALL WIRING SHALL BE #10 AWG. COPPER, THWN. SEE E03 AND E51.

6" THICK REINFORCED CONCRETE DRIVE SLAB W/ #4@ 18" OC. EACH WAY OVER 4" CRUSHED ROCK OR AS SPECIFIED IN SOILS REPORT (if any)

PLANNING AND DESIGN

iii. For single EV charging space, add note to plans: "A listed raceway capable of accommodating a 208/240 volt dedicated branch circuit shall be installed. The raceway shall not be less than trade size 1".

v. Add note to plans: "The service panel or subpanel(s) shall have sufficient capacity to accommodate the required number of dedicated 40 ampere minimum branch circuit(s) for the future installation of the EVSE."

"I agree to comply with the requirements of the water efficient landscape ordinance and submit a complete Landscape Documentation Package."

"The evapotranspiration adjustment factor (ETAF) for new landscape project shall not exceed a factor of 0.55 for residential areas, 0.45 for non-residential areas."

"A separate electrical plan check is required to verify the raceway method(s), wiring schematics and electrical calculations for the electrical charging system."

"The electrical system shall have sufficient capacity to simultaneously charge all electric vehicles at their full rated amperage."

"The service panel or subpanel(s) shall have sufficient capacity to accommodate the required number of dedicated branch circuits) for the future installation of the EVSE."

electric vehicle supply equipment (EVSE).

"The service panel or subpanel(s) circuit directory shall identify the reserved over current protective device space(s) for future EV charging as EV CAPABLE. The raceway termination shall be permanently and visibly marked as EV CAPABLE."

"A copy of the construction documents or a comparable document indicating the information from Energy Code Section 110.10(b) through 110.10(c) shall be provided to the occupant."

location of permanent sign for low emitting, fuel efficient & carpool / van pool vehicles

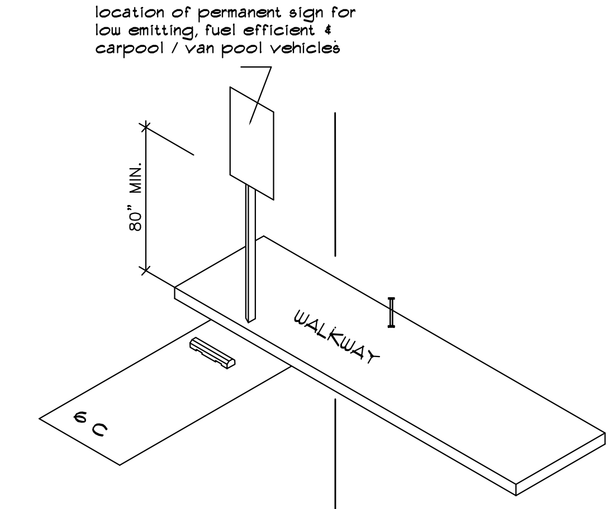

Architect
Amorsolo R. Manligas
LIC#C15983
1756 barry ave
los angeles california
90025
(310) 920-2626

Know what's below. Call before you dig.

Underground Service Alert
CALL TOLL FREE
811
THIS MEMBER DATA EXPIRES THIS DAY

CHEVRON STATION MARKET, STARBUCKS COFFEE SHOP
JOB AT: 22351 W. VENTURA BL.
WOODLAND HILLS CA 91364

6/10/2013

1/8"=1'-0"

A 2